LEDProbes

Catalog

for Electornics Industry

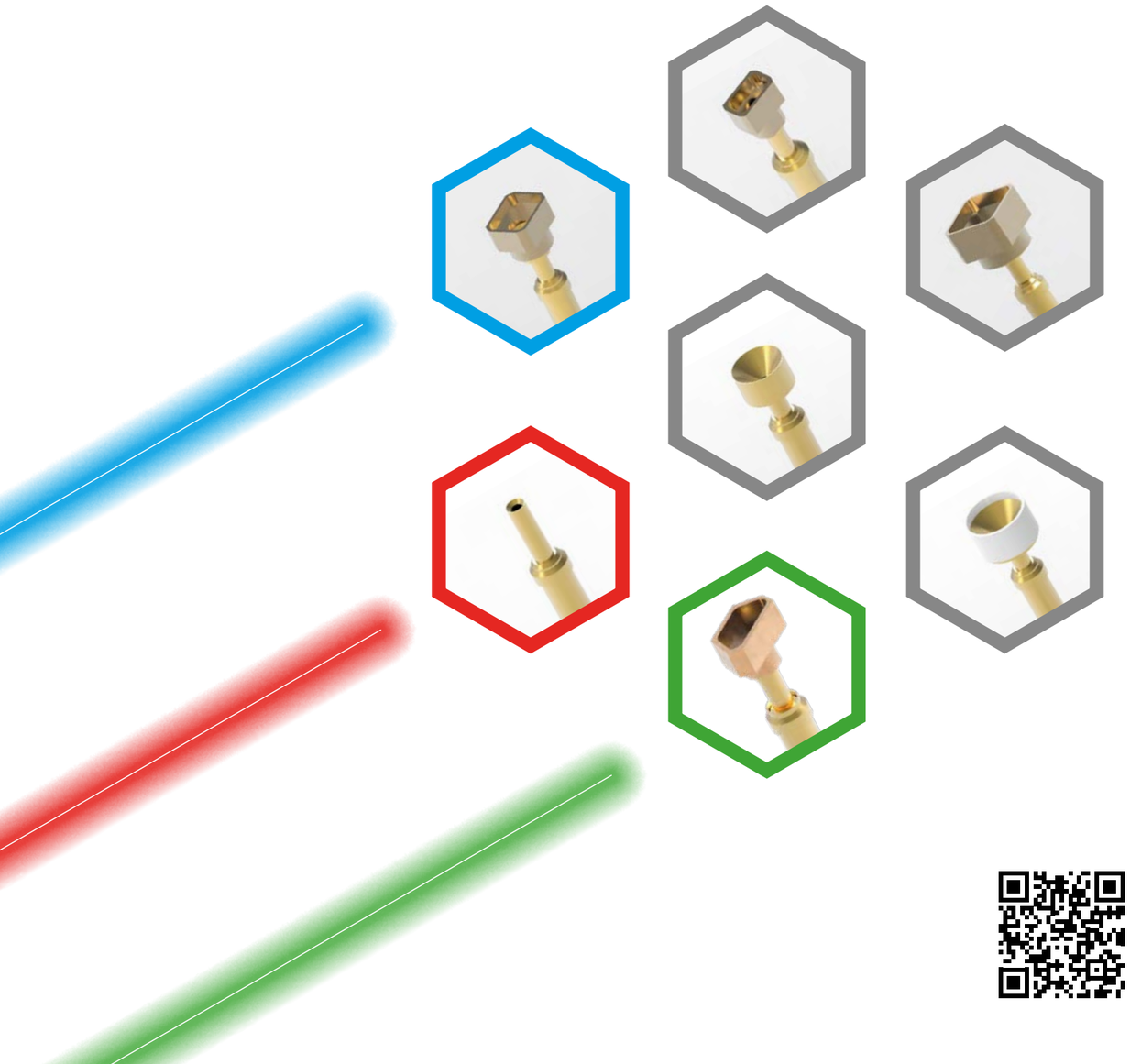

This catalog is a general guide to the products. Buyers and users must decide themselves in regard to the suitability and safety of the products for their applications. No responsibility can be taken from the supplier´s side. We reserve right to carry out design and/or material specification changes without prior notice.

Equip-Test has its headquarters in the metropolitan area of Budapest Hungary in Central Europe, and is a global player in the field of testing and measurement. Our team is dedicated to improve, innovate and implement new things into our everyday and strategic steps. Our innovative approach lead **Equip-Test** to a well-established, customer oriented corporation with over 200 employees worldwide. Our well-trained and loyal staff, offers full support to our customers and they are the backbone of our success.

Quality Assurance

Our daily business process is done according to LEAN approach. All followed and organized in modern software environment committed to Industry 4.0 Operation. Everything we do complies with the latest quality assurance regulations of ISO9001 as well as with ISO 14001 – the so-called "GREEN" certificate. Our company is certified annually by the DEKRA Germany.

Test Equipment

Our Test Equipment department offers complete one-stop solution for most PCBA-based electrical test-related demands. We provide everything from all different types of spring-loaded Test Probes and Bare-board Probes through on ICT and Special Test Fixtures and also ICT Test Systems with customized Test Programs. Into our test equipment products we can implement ISP (In-system Programmers), Interface Solutions and also other related products such as LED measurement, Pneumatic side-contacting Units. Customized Cable Harnesses with Jigs are also available. Our strength lies in our ergonomically designed and functionally well thought-through products with high value-added engineering and our extensive after-sales technical support worldwide.

LEDProbes

LEDProbes provide the vital link to transfer optical measurement signals in Optics Industry as true and as undistorted as possible. This new Product Family supports various Customer Application on demand - and for this very reason it is important for **Equip-Test** to offer high-performance LEDProbes with best quality and value, and thus ensure maximized ROI (Return of Investment) for our customers.

LEDProbes supplied by **Equip-Test** always provide the best-possible available solution for your light signal transmitting demands.

Please send your inquiry to:

info@equip-test.com

Our Technical Support Team will then get in touch with you the soonest possible.

Your Equip-Test Support Team!

Table of Contents

Main Tip Styles and Aplications 1

LEDPobes for Miniature LEDs

LP1000 LED Probe Serie 3
LP1630 LED Probe Serie 5

LED Probe Tools

CR-01 LEDP - Crimping Tool 11

Optical Mass Connect Modules

ITA-LED-20 - Pylon Type Module for ITA 12
RCV-LED-20 - Pylon Type Module for RCV 12

LED Array Masks

Circular, Linear, L-Shape, Custom Solutions 13

Table of Contents

Table of Contents

Contact Head Styles and Applications

LEDProbe designed and invented by Equip-Test is a contacting solution, created to completely shield from external light and transfer the collected light signals, From surface mount LEDs or any other Light Source, in a better way than other conventional LED contacting methods currently available on the market.

Traditional solutions are usually consist of metal based housing with Fiber Optics installed inside a tube with or without prism. These not spring loaded contacts are placed on top or side of the LEDs.

LEDProbe design from Equip-Test is a spring loaded solution that perfectly adjusts to hardware shape of light source.

Design we use compensates DUT's(LED's) minor assembly tolerancies, wether Top - Bottom – Angle or Horizontal access is needed to collect light signals.

Depending on shape of LEDs, we created **tapered, squared, trapeze, cone, sphere contact heads** in order to fit most application. In case of any new design requirement Equip-Test can quickly come-off with solution that fits to application.

With our contact heads, we collect light signals with highest possible effectiveness, depending on each and every application.

LEDProbes have currently two main designs available for main metal probe part, depending on usage for application. These are:

- Rotating
- Non-rotating

Contact Heads are made of industrial plastic or ceramic in order to seal and to prevent short faults when touching the PCB around the DUT.

Our main TipStye Design uses concave radius tips in order to collect light signals with less possible loss.

In order to fit most LED sizes used in SMT technology, we customize any diameter and length of our **LEDProbes**.

Our production technology, standardized the latest and ultra modern CNC Swiss type precision machines, in order to support extremely small sizes on request.

LEDProbe Technology of Equip-Test completely isolates LED DUTs, from streaming light and provides exceptional performance.

To help our customers easily, place fiber optic into our LEDProbes we designed dedicated crimping tool, to help fix any fiber optics in the LEDProbes we manufactore.

Technical Information

Contact Head Styles and Applications

Main Tip Styles and Applications

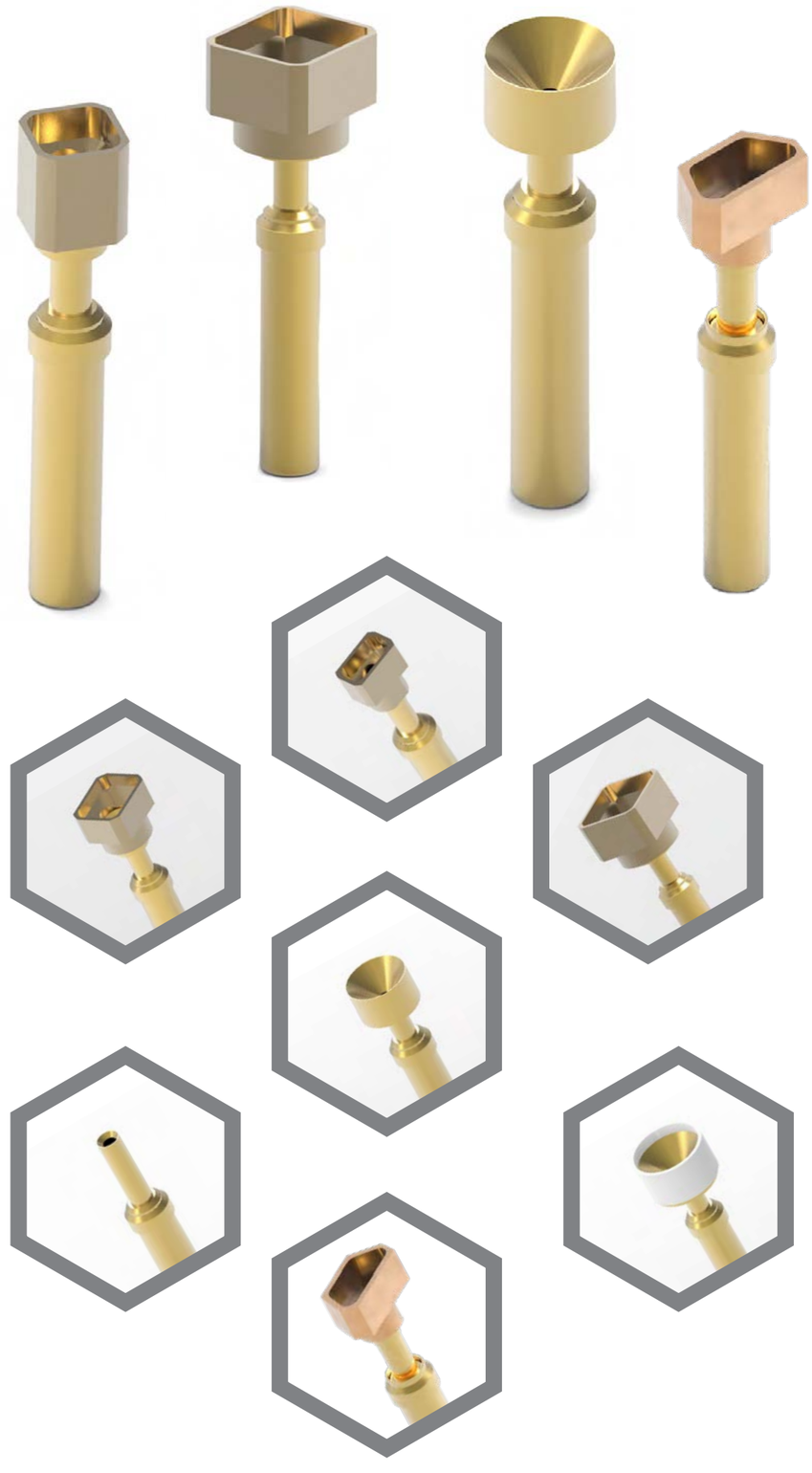

LP1000

LP1000

LP1000 serie LEDProbes are the ideal choice to contact Miniature LED pico/nano/chip sizes.

Standard and custom made Tips are available on demand.

Typical applications:

- Telecommunication: indicators and backlight in telephones and fax machines
- Navigation systems
- Cellular phone displays
- Backlight for office equipment
- Backlight for keypads, audio, and video equipment
- Flat backlight for LCDs, switches, and symbols
- Indoor and outdoor message boards
- Traffic displays

Technical Specifications

Recommended Working Stroke:1.00 mm [0.039]

Full Stroke: 2.00 mm [0.078]

Plunger Material: Beryllium Copper / Gold Plated

Barrel Material: Brass

Spring Material: Music Wire

Mounting Hole Size:
Socket / Receptacle Diameter + 0.01 - 0.03 mm
[0.394 - 1.181 mil] drill bits are recommended

Varies from used drilling technologies and raw materials. For more Technical information consult with us at: info@equip-test.com

LEDPROBES

LEDProbes Available for SMD LEDSizes

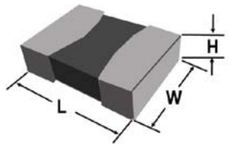

IEC/EN Metric Code	Length x Width L X W (mm)	EIA Inch Code	Length x Width L X W (inch)
0402	0.4 × 0.2	1005	0.016 × 0.0079
0404	0.4 × 0.4	15015	0.016 × 0.016
0603	0.6 × 0.3	0201	0.024 × 0.012
0505	0.5 × 0.5	0202	0.02 × 0.02
0805	0.8 × 0.5	0302	0.03 × 0.02
0808	0.8 × 0.8	0303	0.03 × 0.03
1210	1.3 × 1.0	0504	0.05 × 0.04
1005	1.0 × 0.5	0402	0.039 × 0.020
1608	1.6 × 0.8	0603	0.063 × 0.031
2012	2.0 × 1.25	0805	0.079 × 0.049
2520	2.5 × 2.0	1008	0.098 × 0.079
2828	2.8 × 2.8	1111	0.11 × 0.11
3216	3.2 × 1.6	1206	0.126 × 0.063
3225	3.2 × 2.5	1210	0.126 × 0.10
3625	3.6 × 2.5	1410	0.14 × 0.10
3838	3.81 × 3.81	1515	0.15 × 0.15
4516	4.5 × 1.6	1806	0.18 × 0.063
4520	4.5 × 2.0	1808	0.18 × 0.079
4532	4.5 × 3.2	1812	0.18 × 0.13
4564	4.5 × 6.4	1825	0.18 × 0.25
5025	5.0 × 2.5	2010	0.20 × 0.098
5050	5.08 × 5.08	2020	0.20 × 0.20
5750	5.7 × 5.0	2220	0.225 × 0.197
5664/5764	5.7 × 6.4	2225	0.225 × 0.25
6432	6.4 × 3.2	2512	0.25 × 0.13
6450	6.4 × 5.0	2520	0.25 × 0.197

*Reference dimensions are for information only. Please consult with us at: info@equip-test.com

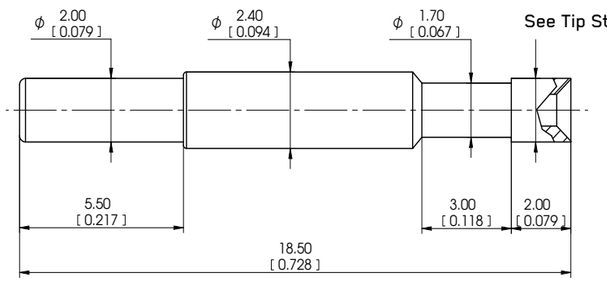

Spring Force at Working Stroke (2/3)		
Code	Rated force	
	(N)	[oz]
S	1.00	3.6
M	1.50	5.4
N	2.00	7.2
L	3.00	10.8

Ξ LEDProbes Ordering Code Example

LP1000 TA 0805 S

a b c d

a: Series • b: Tip Style • c: Tip Diameter Code • d: Spring Force Code
Typical plating is Nickel or Gold.

Ξ Socket / Receptacle Ordering Code Example

RCP091 NR05

x z

x: Series • z: Option

TIP STYLES

Tip Style	Tip Diameter Code	Example	Tip Outer Diameter		Tip Inner Diameter	
			mm	[inches]	mm	[inches]
SQ SQUARE	0705		2.30 x 2.90	0.091 x 0.114	1.90 x 2.50	0.075 x 0.098
	0805		2.40 x 3.00	0.094 x 0.118	2.00 x 2.60	0.079 x 0.102
	1005		2.80 x 3.80	0.110 x 0.150	2.20 x 3.20	0.087 x 0.126
	1010		4.00 x 4.00	0.157 x 0.157	3.40 x 3.40	0.134 x 0.134
	1206		2.80 x 4.50	0.110 x 0.177	2.20 x 3.90	0.087 x 0.154
	1210		3.70 x 4.60	0.146 x 0.181	3.10 x 4.00	0.122 x 0.157
	1808		3.20 x 5.70	0.126 x 0.224	2.60 x 5.10	0.102 x 0.201
	1812		4.70 x 5.70	0.185 x 0.224	4.10 x 5.10	0.161 x 0.201
	2220		6.30 x 7.00	0.248 x 0.276	5.70 x 6.40	0.224 x 0.252

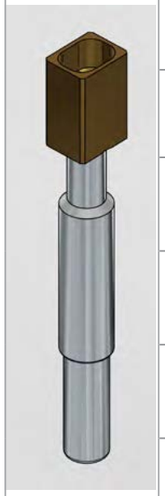

RCP091 NR05

Installation Height

- Fixed: 2.80 mm [0.291]

Variable: not variable

Material: Brass

Plating: Hard Gold

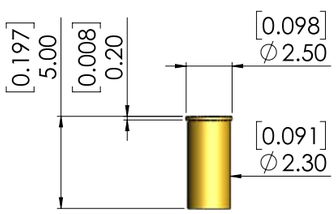

Applicable for:

LP1630

LEDPROBES

TIP STYLES

LP1630

LP1630 serie LEDProbes are the ideal choice to contact Miniature LED pico/nano/chip sizes.

Standard and custom made Tips are available on demand.

Typical applications:

- Telecommunication: indicators and backlight in telephones and fax machines
- Navigation systems
- Cellular phone displays
- Backlight for office equipment
- Backlight for keypads, audio, and video equipment
- Flat backlight for LCDs, switches, and symbols
- Indoor and outdoor message boards
- Traffic displays

Technical Specifications

Recommended Working Stroke: 2.00 mm [0.079]

Full Stroke: 3.00 mm [0.118]

Plunger Material: Beryllium Copper / Gold Plated

Barrel Material: Brass

Spring Material: Music Wire

Mounting Hole Size:

Socket / Receptacle Diameter + 0.01 - 0.03 mm
[0.394 - 1.181 mil] drill bits are recommended

Varies from used drilling technologies and raw materials. For more Technical information consult with us at: info@equip-test.com

LEDProbes Available for SMD LEDSizes

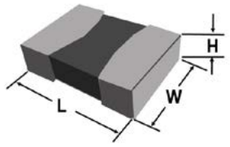

IEC/EN Metric Code	Length x Width L X W (mm)	EIA Inch Code	Length x Width L X W (inch)
0402	0.4 × 0.2	1005	0.016 × 0.0079
0404	0.4 × 0.4	15015	0.016 × 0.016
0603	0.6 × 0.3	0201	0.024 × 0.012
0505	0.5 × 0.5	0202	0.02 × 0.02
0805	0.8 × 0.5	0302	0.03 × 0.02
0808	0.8 × 0.8	0303	0.03 × 0.03
1210	1.3 × 1.0	0504	0.05 × 0.04
1005	1.0 × 0.5	0402	0.039 × 0.020
1608	1.6 × 0.8	0603	0.063 × 0.031
2012	2.0 × 1.25	0805	0.079 × 0.049
2520	2.5 × 2.0	1008	0.098 × 0.079
2828	2.8 × 2.8	1111	0.11 × 0.11
3216	3.2 × 1.6	1206	0.126 × 0.063
3225	3.2 × 2.5	1210	0.126 × 0.10
3625	3.6 × 2.5	1410	0.14 × 0.10
3838	3.81 × 3.81	1515	0.15 × 0.15
4516	4.5 × 1.6	1806	0.18 × 0.063
4520	4.5 × 2.0	1808	0.18 × 0.079
4532	4.5 × 3.2	1812	0.18 × 0.13
4564	4.5 × 6.4	1825	0.18 × 0.25
5025	5.0 × 2.5	2010	0.20 × 0.098
5050	5.08 × 5.08	2020	0.20 × 0.20
5750	5.7 × 5.0	2220	0.225 × 0.197
5664/5764	5.7 × 6.4	2225	0.225 × 0.25
6432	6.4 × 3.2	2512	0.25 × 0.13
6450	6.4 × 5.0	2520	0.25 × 0.197

*Reference dimensions are for information only. Please consult with us at: info@equip-test.com

Tip Style	Tip Diameter Code	Example	Tip Outer Diameter		Tip Inner Diameter	
			mm	[inches]	mm	[inches]
SQ SQUARE	0705		2.30 x 2.90	0.091 x 0.114	1.90 x 2.50	0.075 x 0.098
	0805		2.40 x 3.00	0.094 x 0.118	2.00 x 2.60	0.079 x 0.102
	1005		2.80 x 3.80	0.110 x 0.150	2.20 x 3.20	0.087 x 0.126
	1010		4.00 x 4.00	0.157 x 0.157	3.40 x 3.40	0.134 x 0.134
	1206		2.80 x 4.50	0.110 x 0.177	2.20 x 3.90	0.087 x 0.154
	1210		3.70 x 4.60	0.146 x 0.181	3.10 x 4.00	0.122 x 0.157
	1808		3.20 x 5.70	0.126 x 0.224	2.60 x 5.10	0.102 x 0.201
	1812		4.70 x 5.70	0.185 x 0.224	4.10 x 5.10	0.161 x 0.201
	2220		6.30 x 7.00	0.248 x 0.276	5.70 x 6.40	0.224 x 0.252

Applicable for:

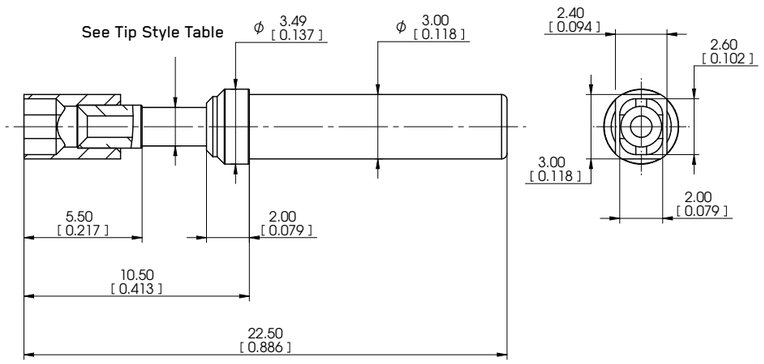

Spring Force at Working Stroke (2/3)		
Code	Rated force	
	(N)	[oz]
S	1.00	3.6
M	1.50	5.4
N	2.00	7.2
L	3.00	10.8

RCP118 SR03

Installation Height

- Fixed: 7.40 mm [0.291]
- Variable: not variable

Material: Brass

Plating: Hard Gold

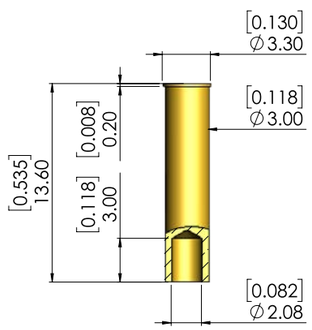

Ξ LEDProbes Ordering Code Example

LP1630 SQ 0805 S

a b c d

a: Series • b: Tip Style • c: Tip Diameter Code • d: Spring Force Code
Typical plating is Nickel or Gold.

Ξ Socket / Receptacle Ordering Code Example

RCP118 SR03

x z

x: Series • z: Option

LP1630

LEDPROBES

TIP STYLES

LP1630

LP1630

LP1630 serie LEDProbes are the ideal choice to contact Miniature LED pico/nano/chip sizes.

Standard and custom made Tips are available on demand.

Typical applications:

- Telecommunication: indicators and backlight in telephones and fax machines
- Navigation systems
- Cellular phone displays
- Backlight for office equipment
- Backlight for keypads, audio, and video equipment
- Flat backlight for LCDs, switches, and symbols
- Indoor and outdoor message boards
- Traffic displays

Technical Specifications

Recommended Working Stroke: 2.00 mm [0.079]

Full Stroke: 3.00 mm [0.118]

Plunger Material: Beryllium Copper / Gold Plated

Barrel Material: Brass

Spring Material: Music Wire

Mounting Hole Size:
Socket / Receptacle Diameter + 0.01 - 0.03 mm
[0.394 - 1.181 mil] drill bits are recommended

Varies from used drilling technologies and raw materials. For more Technical information consult with us at: info@equip-test.com

LEDProbes Available for SMD LEDSizes

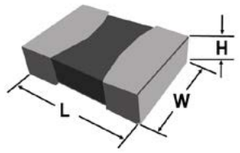

IEC/EN Metric Code	Length x Width L X W (mm)	EIA Inch Code	Length x Width L X W (inch)
2012	2.0 × 1.25	0805	0.079 × 0.049
3216	3.2 × 1.6	1206	0.126 × 0.063
3225	3.2 × 2.5	1210	0.126 × 0.10
4520	4.5 × 2.0	1808	0.18 × 0.079
4532	4.5 × 3.2	1812	0.18 × 0.13
5750	5.7 × 5.0	2220	0.225 × 0.197

*Reference dimensions are for information only. Please consult with us at: info@equip-test.com

Spring Force at Working Stroke (2/3)		
Code	Rated force	
	(N)	[oz]
S	1.00	3.6
M	1.50	5.4
N	2.00	7.2
L	3.00	10.8

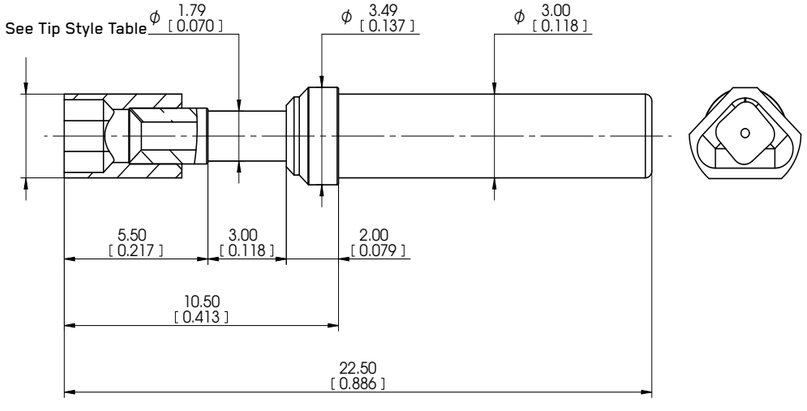

Tip Style	Tip Diameter Code	Example	Outer Tip Diameter	
			mm	[inches]
TR TRAPEZE	0805		3.00	0.118
	1005		4.00	0.157
	1010		5.00	0.197
	1206		6.00	0.236
	1210		7.00	0.276

*Different sizes are available upon request

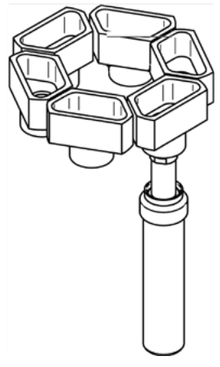

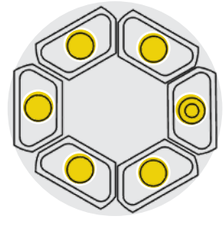

This Contact Head can be configured for small diameter circular arrays where measuring individual performance of each LED is imporant

Applicable for:

Ξ LEDProbes Ordering Code Example

LP1630 TR 0805 S

a b c d

a: Series • b: Tip Style • c: Tip Diameter Code • d: Spring Force Code
Typical plating is Nickel or Gold.

Ξ Socket / Receptacle Ordering Code Example

RCP118 SR03

x z

x: Series • z: Option. See **Page 6** for detailed information.

LP1630

LEDPROBES

TIP STYLES

LP1630

LP1630

LP1630 serie LEDProbes are the ideal choice to contact Miniature LED pico/nano/chip sizes.

Standard and custom made Tips are available on demand.

Typical applications:

- Telecommunication: indicators and backlight in telephones and fax machines
- Navigation systems
- Cellular phone displays
- Backlight for office equipment
- Backlight for keypads, audio, and video equipment
- Flat backlight for LCDs, switches, and symbols
- Indoor and outdoor message boards
- Traffic displays

Technical Specifications

Recommended Working Stroke: 2.00 mm [0.079]

Full Stroke: 3.00 mm [0.118]

Plunger Material: Beryllium Copper / Gold Plated

Barrel Material: Brass

Spring Material: Music Wire

Mounting Hole Size:
Socket / Receptacle Diameter + 0.01 - 0.03 mm
[0.394 - 1.181 mil] drill bits are recommended

Varies from used drilling technologies and raw materials. For more Technical information consult with us at: info@equip-test.com

Plunger Material	
Code	**Material**
0	Steel
9	Plastic

LEDProbes Available for SMD LEDSizes

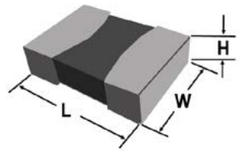

IEC/EN Metric Code	Length x Width L X W (mm)	EIA Inch Code	Length x Width L X W (inch)
0402	0.4 × 0.2	1005	0.016 × 0.0079
0404	0.4 × 0.4	15015	0.016 × 0.016
0603	0.6 × 0.3	0201	0.024 × 0.012
0505	0.5 × 0.5	0202	0.02 × 0.02
0805	0.8 × 0.5	0302	0.03 × 0.02
0808	0.8 × 0.8	0303	0.03 × 0.03
1210	1.3 × 1.0	0504	0.05 × 0.04
1005	1.0 × 0.5	0402	0.039 × 0.020
1608	1.6 × 0.8	0603	0.063 × 0.031
2012	2.0 × 1.25	0805	0.079 × 0.049
2520	2.5 × 2.0	1008	0.098 × 0.079
2828	2.8 × 2.8	1111	0.11 × 0.11
3216	3.2 × 1.6	1206	0.126 × 0.063
3225	3.2 × 2.5	1210	0.126 × 0.10
3625	3.6 × 2.5	1410	0.14 × 0.10
3838	3.81 × 3.81	1515	0.15 × 0.15
4516	4.5 × 1.6	1806	0.18 × 0.063
4520	4.5 × 2.0	1808	0.18 × 0.079
4532	4.5 × 3.2	1812	0.18 × 0.13
5025	5.0 × 2.5	2010	0.20 × 0.098
5050	5.08 × 5.08	2020	0.20 × 0.20
5750	5.7 × 5.0	2220	0.225 × 0.197

*Reference dimensions are for information only. Please consult with us at: info@equip-test.com

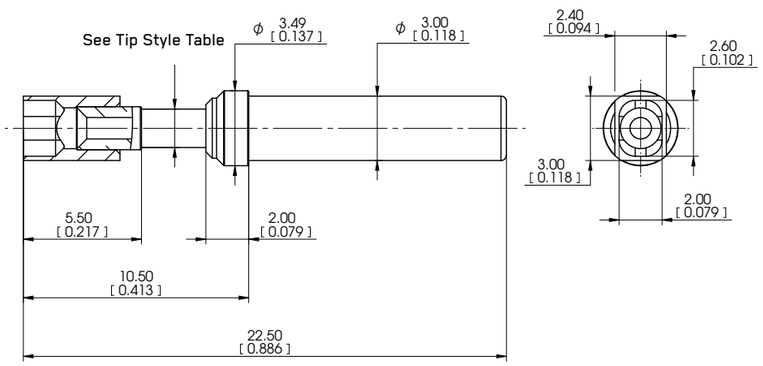

Spring Force at Working Stroke (2/3)		
Code	**Rated force**	
	(N)	**[oz]**
S	1.00	3.6
M	1.50	5.4
N	2.00	7.2
L	3.00	10.8

Tip Style	Tip Diameter Code	Example	Outer Tip Diameter mm	Outer Tip Diameter [inches]
TA TAPERED	04		1.79	0.070
	94*		2.30	0.091
	05		2.00	0.079
	95		2.50	0.098
	06		3.00	0.118
	96		3.50	0.138
	07	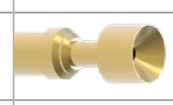	4.00	0.157
	97		4.50	0.177
	08	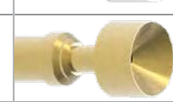	5.00	0.197
	98		5.50	0.217
	09		6.00	0.236
	99		6.50	0.256

***Note:Tip Style 9x Outer Diameter is bigger due to Insulator!**

*Different sizes are available upon request

Applicable for:

Ξ LEDProbes Ordering Code Example

LP1630	TA	04	S
a	b	c	d

a: Series • b: Tip Style • c: Tip Diameter Code • d: Spring Force Code
Typical plating is Nickel or Gold.

Ξ Socket / Receptacle Ordering Code Example

RCP118	SR03
x	z

x: Series • z: Option . See **Page 6** for detailed information.

CR-01 LEDP Crimping Tool

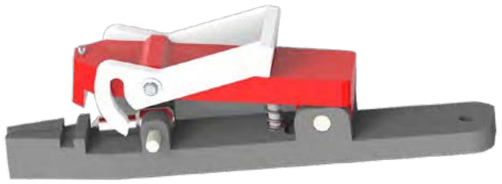

Equip-Test is well known about great support and friendly staff. Therefore we created this crimping tool to help our customers crimp the LEDProbes at their place, easily and effectively.

Place the LED Probe into the sleeve.

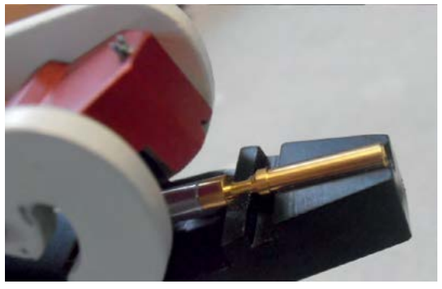

Push till stopper peg fixes it.

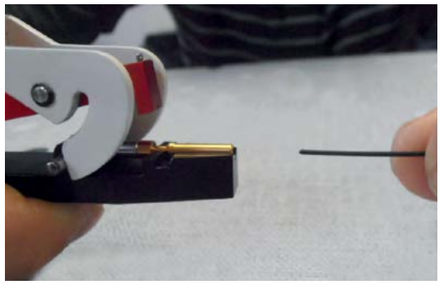

Prepare Optical Fiber as shown.

Insert Optical Fiber till it stops.

Press the handle.

Open the handle.

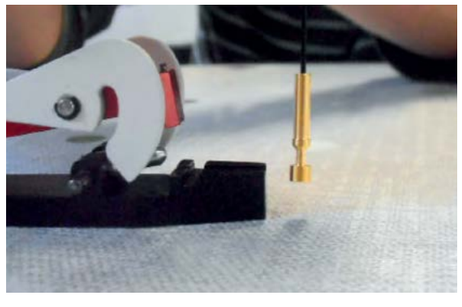

Well-Done fiber on place LED Probe ready!

Optical Pylon Modules

Complete Solution

Designed for

Best Light Transmission Performance

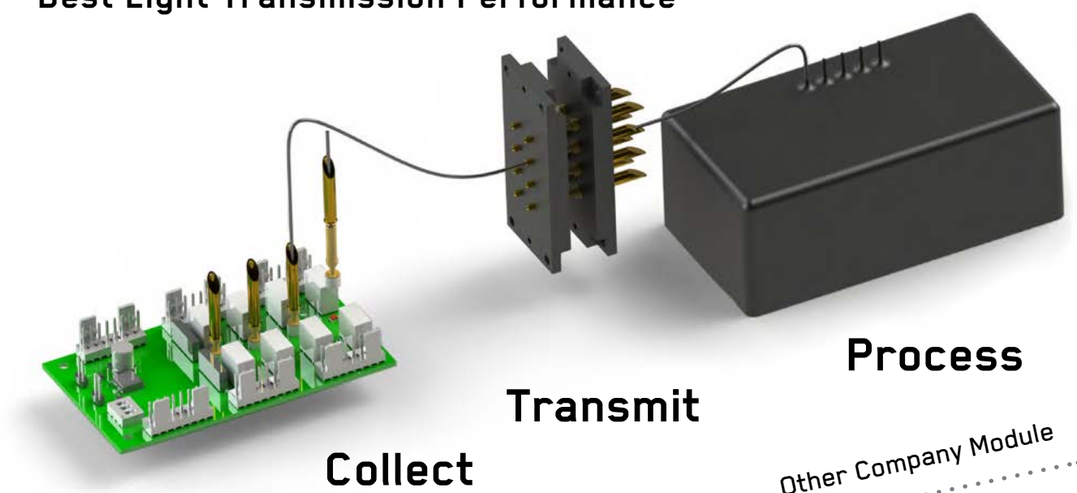

Process

Transmit

Collect

Contact

Other Company Module

LEDProbe + Pylon Type LEDProbe

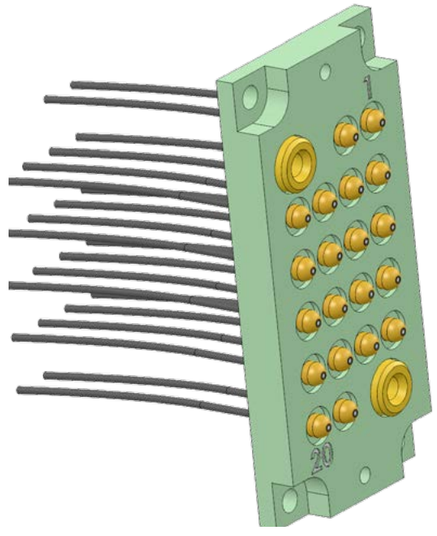

ITA-LED-20

Fixture Side

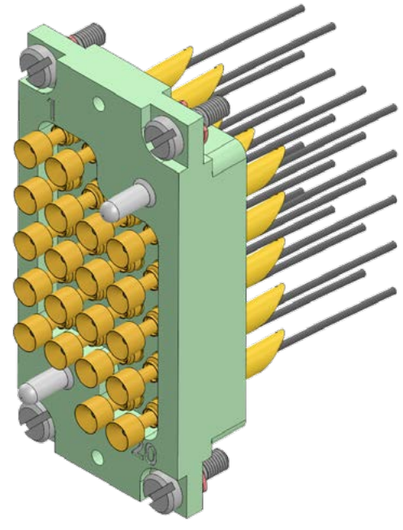

RCV-LED-20

System Side

LED Array Masks

Customized Sealing Masks, configured to Your LED Array.

Circular

Linear

Custom Made

DIP

SMB

COB

In Multiple Rows & Shapes

HUNGARY - HEADQUARTERS

Equip - Test Kft.

Vágóhíd u. 19.
H-2220 Vecsés, Hungary

Phone number: +36 1 533 3165
E-mail: info@equip-test.com

POLAND

Equip - Test Sp. z o. o.

Torowa 3C
30-435 Kraków, Poland

Phone number: +48 12 426 0260
E-mail: infopl@equip-test.com

CZECH REPUBLIC

Equip - Test s.r.o.

Masná 106
602 00 Brno-Židenice, Czech Republic

Phone number: +420 733 532 880
E-mail: infocz@equip-test.com

UK, IRELAND, BENELUX, ITALY, PORTUGAL & SCANDINAVIA

Equip - Test

Phone number: +44 121 790 0526
Mobile: +36 30 642 9929
E-mail: info@equip-test.com

FRANCE & MAGHREB

Equip - Test

Phone number: +36 1 533 3165
Mobile: +36 30 642 9929
E-mail: info@equip-test.com

USA & CANADA

Equip - Test

Phone number: +1 512 717 7450
Mobile: +36 30 642 9929
E-mail: info@equip-test.com

LATIN AMERICA & SPAIN

Equip - Test

Phone number: +36 1 533 3165
Mobile: +52 656 738 0001
E-mail: info@equip-test.com

DISTRIBUTOR

GERMANY

Equip - Test GmbH

Max-Stromeyer-Str. 116
D-78467 Konstanz, Deutschland

Phone number: +49 7531 698 4377
Mobile: +49 151 12929189
E-mail: infode@equip-test.com

SLOVAKIA

Equip - Test s.r.o.

Čečinová 16/G
SK 821 05 Bratislava, Slovakia

Phone number: +421 911 434 119
E-mail: infosk@equip-test.com

ROMANIA

SC. Echip - Test SRL

Str. Locomotivei Nr.4
410431 Oradea, Bihor, Romania

Phone number: +40 259 410 121
E-mail: inforo@equip-test.com

SERBIA

Multi - Test d.o.o.

Topolski put 65.
21220 Bečej, Serbia

Phone number: +381 652 054 160
E-mail: info@multi-test.rs

BULGARIA

Equip - Test OOD

Uzundzhovska str. Nr. 12
Sofia 1000, Bulgaria

Mobile: +359 89 465 3694
E-mail: infobg@equip-test.com

SHENZEN CHINA - 中國

Equip - Test (Shenzhen) Co. Ltd.

Room 215, No. 16, Lane 3 Liuxian 2nd Road, Area 71 Xin'an Street, Bao'an District, Shenzhen City, Guangdong Province, China

伊奎测试设备（深圳）有限公司

深圳市宝安区新安街道71区留仙二路三巷16号215房

Mobile: +86 135 3410 0732
E-mail: infocn@equip-test.com

BALTIC REGION

Equip - Test OÜ

Narva maantee 5.
10117 Tallinn
Estonia

Phone number: +36 1 533 3165
Mobile: +36 30 642 9929
E-mail: infoee@equip-test.com

NORTH MACEDONIA

Equip-Test DOOEL

Kej 13-ti Noemvri
1000 Skopje
North Macedonia

Phone number: +36 1 533 3165
Mobile: +389 70 306 006
E-mail: info@equip-test.com

UKRAINE

Equip - Test Ukraine TOV

Hoydy str., 10 office 72
Uzhgorod, 88000, Ukraine

Phone number: +38 0312 61 2398
Mobile: +38 050 432 4188
E-mail: infoua@equip-test.com

MOLDOVA

SC Equip - Test SRL

2001 Chișinău
B-dul Ștefan cel Mare, Nr. 65, of. 806
Moldova

Phone number: +373 22 845 355
Fax: +373 22 845 355
Mobile: +373 68 698 877
E-mail: infomd@equip-test.com

SINGAPORE -ASIA HQ

Equip - Test Asia Pte. Ltd.

701 Sims Drive
#06-03, LHK Building
Singapore 387383

Phone number: +65 3159 3388
Fax: +65 6291 5408
Mobile: +65 9786 4698
E-mail: infosg@equip-test.com

EQUIPTEST

TEST ▪ SUPPORT ▪ INNOVATE

www.equip-test.com